Eco. Env. & Cons. 27 (February Suppl. Issue) : 2021; pp. (S245-S252)
Copyright@ EM International
ISSN 0971–765X

Simplified computer-Aided Hydraulic design of clariflocculator of water treatment plant

Lakshmi Keshav[1]*, V. Ramesh[1] and M. Raghava Prasad[2]

Velagapudi Ramakrishna Siddhartha Engineering College, Vijayawada 520 007, Andhra Pradesh, India

(Received 21 July, 2020; Accepted 13 September, 2020)

ABSTRACT

This work presents a very useful software tool to design Clariflocculator, most important secondary unit in both water and wastewater treatment plant WTP. The detailed design steps and calculation for its each component are also presented. Its hydraulic design is complex, tedious and quantitative. An effort is made to simplify the entire manual operations with commonly available MS office tool. This method is being used in WTP in Krishna river bank, Vijayawada, India. This spreadsheet is frugal by design, helps in error-free calculations and can be used any quantity design. The entire manual operations are simplified and made user-friendly for designers.

Key words : *Clariflocculator, MS Excel, Hydraulic design, Water treatment, Computer software*

Introduction

Vijayawada is fortunate to be situated on the banks of Krishna River, which ensures that water is abundantly available in the City itself. But the city including slum areas is in short of the adequate water supply network and access to the piped water supply. Moreover, there is a huge demand-supply gap, which is likely to widen drastically in the future. There is no comprehensive master plan in the Water supply Scheme for Vijayawada for implementation of the scheme. Considering the many challenges into consideration, the following goals as given in Table 1 for different horizon years have been identified. For providing continuous and good quality of water to all regions in Vijayawada throughout the year Government of Andhra Pradesh is constructing a new additional water treatment plant. Water supply to the city is already taken from constructed intake structures of 5MGD, 8MGD, 11MGD, 16MGD capacity in Krishnan River Bank, Prakasam barrage as shown in Figure 1 and its total being 40MGD. To meet the additional water demand due to population growth along with existing plants, an additional 5MLD capacity construction work has been started from the beginning of 2020. The main components are intake well, flash mixer, chemical house, Clariflocculator, rapid sand filter, pure water sump, and pump house Figure 2 shows the general

Fig. 1. Aerial View of Existing WTP in Vijayawada

(1Associate Professor, 2Assistant Professor)

Table 1. Goals and Service Outcomes for different Horizon years

Sl.No	Vision Outcomes	Area	2005-06	2010	2015	2020
1	Coverage(%)	City	70	75	100	100
		Poor slum	20	60	100	100
2	Access	City	27	75	100	100
		Poor slum	NA	40	70	100
3	Hours of Supply Day	City	4	12	24	24
		Poor slum	4	12	18	24
4	Qty of supply (lpcd)	City	157	160	160	160
		Poor slum	110	140	160	160
5	%NRW		60	30	20	15
6	Cost Recovery (% of O&M)		63	80	100	100
7	Water Quality	Potable	Potable (WHO)	Potable (WHO)	Potable (WHO)	

layout of the new additional 5MLD capacity WTP components.

The present project centered on the detailed hydraulic design and construction Clariflocculator of Water Treatment Plant (Burile and Nagarnaik, 2010; Bermúdez *et al.*, 2020) under construction process in Vijayawada as well as for upcoming plans anywhere.

Clariflocculator

This research is mainly focusing on the design of Clariflocculator which is widely used in the country in water and wastewater treatments. The coagulation and sedimentation processes are effectively incorporated in this single unit. It is a combination of flocculation and clarification in one unit. It has two concentric tanks where the inner tank serves as a flocculation basin and the outer tank serves as a clarifier. It has five zones

Inlet zone: Water enters through inlet pipe

Flocculator: Water is gently mixed to make Flocs

Clarifier: Flocs are given time to settle down

Sludge zone: Settled flocs are gathered here and sent for disposal

Outlet Zone: Cleanest water at the top is taken out

MS Excel

This paper focuses on developing an automation system (Niazkar and Afzali, 2017) for the design of

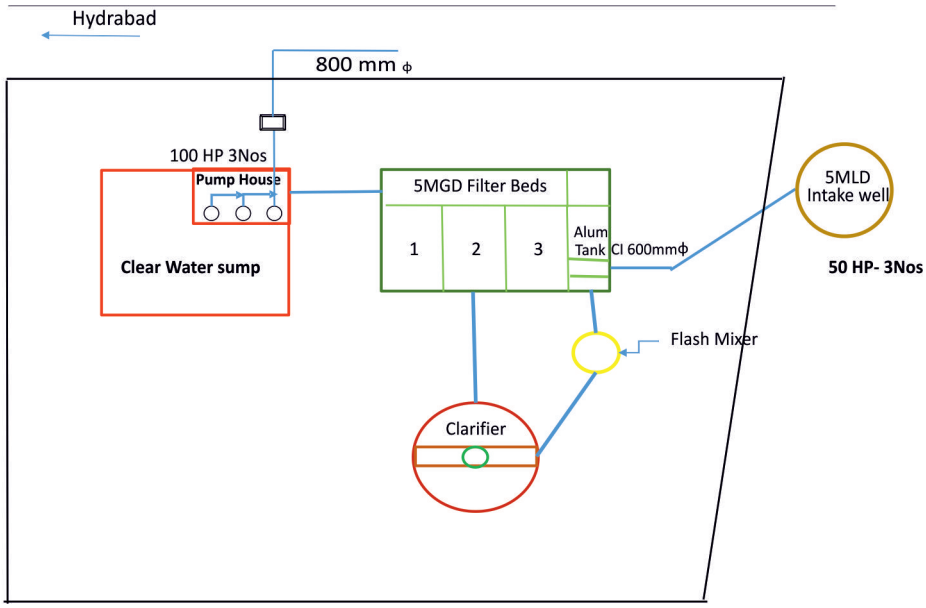

Fig. 2. Layout of proposed layout of additional plant

Clariflocculator in the Water Treatment Plant (WTP) using commonly available and user-friendly software. The Computer program (Ferrer *et al.*, 2008) in MS Excel has been developed to design the components of Clariflocculator in WTP. Figure 3 to 6 shows the spreadsheet developed to design various components of Clarifflocutor. If the required design value is given as input in the blue colour tab as shown in Figure 3, further required all hydraulic design values will be shown as output in respective design parameters cell. Also, the subsequent layout of Clariflocculator with varying dimensions corresponding to the calculated hydraulic profile will be displayed automatically in the same spreadsheet as shown in Figure 7. All cells are locked except the input cell which in Blue Colour, however few optional values in grey colour cells are unlocked to alter values manually if required.

Design of Clariflocculator Components

The Main Components of Clariflocculator are Inlet pipe, Flocculator, Clarifier, Sludge collection and

CLARIFLOCCULATOR			
DESIGN CALCULATIONS FOR	5	MLD	Enter the required Design value
GENERAL PARAMETERS	Dimensions	Units	Remarks
Design Flow output from WTP	5	MLD	
Design Flow input to WTP, consider 5% losses in WTP	5.25	MLD	
Design flow	218.75	cum/hour	
Pumping Hours in Raw Water Pumping Station	23	Hours	Alter the value manually if required
On the basis of 23 hour pumping, design flow	228	cum/hour	
COMPONENTS TO BE DESIGNED	Dimensions	Units	Remarks
A.INLET PIPE TO FLOCCULATOR			
Assume a Velocity	1	m/sec	Alter the value manually if required
Required Influent pipe diameter	0.278	m	
Provide a dia of Inlet pipe	0.300	m	
B. FLOCCULATOR			
No . Of clariflocculators	1	no	
Flow in Clariflocculator	228	cum/hour	0.063333333
Detention time in flocculation zone, range 10-40 minutes	30.0	Minutes	As per Clause: 7.4.3.2(2)
Volume reqd. in flocculation zone	114	cum	
Provide Water Depth in flocculation zone, range 3 to 4.5 m	3.75	m	Alter the value manually if required
Required Dia of flocculation tank	6.223030986	m	
Provide a Dia of flocculation tank	7	m	
Volume provided	144.24375	cum	Volume Provided > Volume Required. OK

Fig. 3. Homepage of Clarifloccutor Software tool

C.CLARIFIER ZONE			
Assume surface loading (Range 30 to 40 $m^3/m^2/day$)	40	$m^3/m^2/day$	As per Clause: 7.5.8
Surface area required	136.9565217	sqm	
Area of Flocculation	38.465	sqm	
Total Area of Clariflocculator including flocculation	175.4215217	sqm	
Provide area of Clariflocculator including flocculation	176	sqm	
Dia of Clariflocculator	14.9734372	m	
Provide dia of Clariflocculator	15	m	
Detention time (detention time range 2 to 2.5 hours)	2	hours	As per Clause: 7.5.6
Volume required in Clarifying zone	456	cum	
Water depth in clarifying zone (assumed-specifications)	3	m	Alter the value manually if required
Volume provided in Clarifying zone,	410.8695652	cum	
velocity of water below the partition wall assumed (clari) as per specifications	0.3	m/min	Alter the value manually if required
Surface over flow rate	1	cum/sqm/hr	
free board (assumed as per specifications)	0.3	m	Alter the value manually if required
material of construction	R.C.C		
velocity gradient G sec-1 (10 to 75)	40	sec-1	Alter the value manually if required
Co efficient of drag (0.8 -1.9) Cd- Newton coefficient of Drag	1.8		Alter the value manually if required
Dynamic viscosity (μ)	0.89*10^-3	pa.s	
velocity of water at the tip of blade(V-at tip)	0.4	m/sec	Recommended (0.3 to 0.4m/sec)
velocity of water adjacent to the tip of paddel (v=25%V)	0.1	m/sec	
density of water	998	kg/cu.m	

Fig. 4. Computerized design of Clarifier Zone

D.PADDLES -MECHANICAL EQUIPMENT			
Total power input to the flocculator	205.4031	Watts	$P=G^2\mu$.Vol of flocculator
Area of Paddle(Ap)	8.47	m^2	$P=(1/2)Cd.\rho.Ap(V-v)^3$
Assumed depth, width in m	2	1	Alter the value manually if required
Total Number of Paddles with (2m depth, 1m width)	4.00		
No . Of paddels set	2	Sets	Alter the value manually if required
Number of Shaft	2	Nos	Alter the value manually if required
Number of paddles in each shat	2		
Distance of shaft from centre of Clariflocculator	2		
rpm of paddel (assumed- specification)	4	rpm	Alter the value manually if required
Ratio of paddles aera to area of flocculator (10to 25%)	22.01934734	satisfied	Acceptable limit
dist of paddle shaft from the centre line of verticle shaft	0.955414013	m	
Provide dist of paddle shaft from the centre line of verticle shaft	1	m	
E.OPENING IN PARTITION WALL BETWEEN CLARIFIER & FLOCCULATOR			
Area of opening below the partition wall	12.2	m^2	
Depth below partition wall	0.6	m	
Additional depth for storage of sludge	0.9	m	
Total depth of tank at partition including freeboard	5.5	m	
F.PERIPHERAL LAUNDER & WEIR			
Provide outlet launder of , width	0.6	m	Alter the value manually if required
Provide outlet launder of , depth	0.6	m	Alter the value manually if required
Flow in Launder, for 50% flow length	114	m3/hr	
Length of Weir	47.1	m	πD_{ef}
Weir Loading taken	116.3112711	m3/d/m	As per Clause 7.5.8 (100 to 300m^3 / m/ day
Free fall from top water level of clariflocculator	0.10	m	Alter the value manually if required
Depth of water in Launder	0.50	m	
Velocity of flow in Launder	0.09	m^3/sec	<0.4m/sec Hence OK
Actual launder length provided	48.042	m	
Surface Loading per Hour	1.649420099	m3/ m2/ Hr.	
Surface Loading per Day	39.58608237	m3/ m2/ Day.	As per manual 30 to 40m3/ m2/ Day.OK
Bottom slopes / or scrapper bridge time for one rev. : Minimum 1:12 horizontal > 40 Minutes or more			

Fig. 5. Computerized design of Clarifier Zone

G.SLUDGE DISCHARGE PIPE			
Daily sludge outflow	12.5	m^3	(Sludge discharge 2500L/MLD flow) Consistency(98 %) water
Sludge Discharge period	15	min	Alter the value manually if required
Minimum size of sludge pipe	0.25	m	Alter the value manually if required
Sludge discharge	0.0139	m^3/sec	
Sludge velocity	0.2831	m/sec	
H.PERIPHERAL TRACTION DRIVE UNIT			
Power requirement	0.75	w/m^2	As per 7.5.9
Motor rating	165.6703125	W:HP	0.222
Suggesting Motor	0.5	HP	3phase TEFC motor with necessary R.G.Box with pulley drive to give an ultimate RPH 1 to 1.5 to Bridge Unit

Fig. 6. Computerized design of Sludge Discharge and Outlet components

discharge units, and finally outlet elements. The following work presents the design steps and calculation for each component of the Clariflocculator of water treatment plant (WTP), due to its vital role in it and drinking purpose

General Details

Design Flow output from WTP = 5MLD
Design Flow input to WTP, consider 5% losses in WTP =5MLD x 1.05= 5.25MLD
As per CPHEEO manual [5] wash water requirement =2.5% (cl.7.6.3.14)
However, 5% is considered for wash water and desludging requirements

Design flow = (5.25X 1000)/24= 218.75 cum/hour

Pumping Hours in Raw Water Pumping Station =23 hours

On the basis of 23 hour pumping, design flow Q=(218.75 x 24)/23= 228 Cum/Hour

Inlet Pipe to Flocculator (Inlet Zone)

Assume a Velocity V= 1 m/sec

Required Influent pipe diameter

(Q=AV) = $\sqrt{\frac{\text{[illegible]}}{\text{[illegible]}}}$ =0.28m

Provide a diameter of the Inlet pipe =0.3m

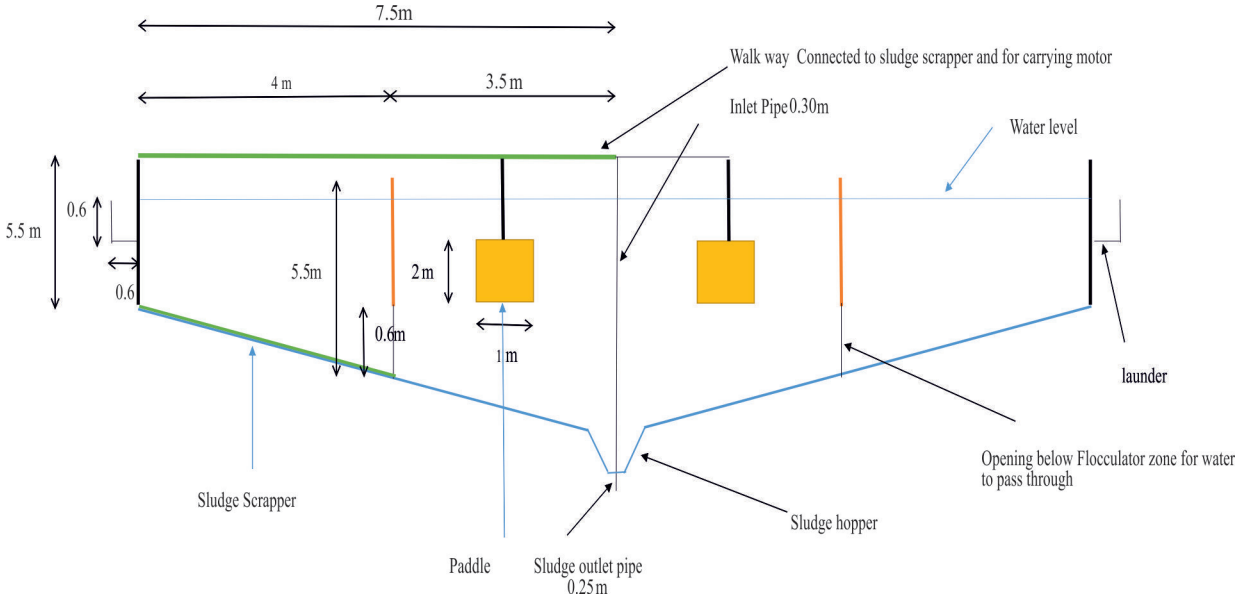

Fig. 7. Layout of Clariflocculator

Fig. 8. Inlet Zone, Flocculator and Bridge

Flocculator

Number of Clariflocculator =1 unit
Flow in Clariflocculator = 228.26 cum/hour/ Number of Clariflocculator =228.26 cum/hour
Detention time in flocculation zone, range 10-40 minutes
As per Clause: 7.4.3.2(2) = 30 minutes commonly used for design
Volume reqd. in flocculation zone =(228.26 x30)/ 60= 114.1 cum
Provide Water Depth in flocculation zone,(range 3 to 4.5 m)= 3.75m

Required Diameter of flocculation tank = $\sqrt{\frac{\text{[illegible]}}{\text{[illegible]}}}$ = 6.225m

(Ah=V)

Provide a Diameter of flocculation tank = 7m

Volume provided = $\frac{\text{[illegible]}}{\text{[illegible]}}$ X 3. =144.24m3

Clarifier Zone

Assume surface loading (Range 30 to 40 $m^3/m^2/$ day) (As per Clause: 7.5.8) = 40 $m^3/m^2/$day

Surface area required = $\frac{\text{[illegible]}}{\text{[illegible]}}$136.96 sqm

Area of Flocculation = $\frac{\text{[illegible]}}{\text{[illegible]}}$ = 38.465 sqm

Total Area of Clariflocculator including flocculation = Surface area required + Area of Flocculation= 136.96 +38.465= 175.425 sqm

Provide area of Clariflocculator including flocculation = 176 sqm

Diameter of Clariflocculator = $\sqrt{\frac{\text{[illegible]}}{\text{[illegible]}}}$ = 14.97 m

Provide dia of Clariflocculator =15m

Fig. 9. Clariflocculator under construction

Detention time (detention time range 2 to 2.5 hours) = 2 hours

Volume required in Clarifying zone = 228.26 x 2= 456.52 cum

Water depth in clarifying zone (assumed-specifications) = 3 m

Volume provided in Clarifying zone (Surface Area req x Water Depth = 136.96x3= 410.88cum

Velocity of water below the partition wall assumed as per specifications= 0.3 m/min

Surface over flow rate =Design flow/ Surface Area required

=218.75/136.96= 1.59 ; Take 1 cum/sqm/hr

Free board (assumed as per specifications) =0.3m

Material of construction -Reinforced Cement Concrete

Velocity gradient G sec-1 (10 to 75)= 40(Assumed)

Co efficient of Drag (0.8 -1.9) Cd- Newton coefficient of Drag -1.8 considered

Dynamic viscosity (μ)=0.89 × 10^{-3} pa.s

Velocity of water at the tip of blade(V-at tip) Recommended (0.3 to 0.4m/sec)= 0.4m/sec

Velocity of water adjacent to the tip of paddel (v=25%V) 0.4 x 0.25=0.1 m/sec

Density of water =998 kg/cu.m

Paddles -Mechanical Equipment

Total power input to flocculator, P=G2μ.Vol of flocculator =(40x40) x 0.89 × 10^{-3} × 144.24= 205 Watts

Power input=(1/2)Cd.ρAp(V-v)3

Where Cd= Newtos coefficient of drag, 1.8

ρ=Density of water at 25° C, 997 kg/m^3

V=Velocity of the tip of Blades = 0.4m/s (Recommended range 0.3-0.4m/s)

Fig. 10. Flocculator Wall Opening, Clarifier Zone, Outlet

v=Velocity of water at tip of of blade (25% of V)

= 0.25 × 0.4 =0.1m/s

205 = 0.5x1.8x997xAp(0.4-0.1)^3

Area of paddles Ap= 8.47 m^2

Area of paddles 10% to 25% area of Flocculator as per Specifications. Hence design is ok.

Suggesting Motor 0.5 HP, 3 phase TEFC motor with necessary R.G. Box with pulley drive to give an ultimate RPH 1 to 1.5 to Bridge Unit Total Number of Paddles with (2m depth, 1m width) =

Ap/(depthx Width of paddle)= 14/(2x1) =4nos

Number of paddles set =2

Number of Shaft = 2 Nos

Two number of paddles in each shaft

Distance of shaft from centre of Clariflocculator =(Dia of flocculator-Dia of inlet pipe)/4 = (7-0.3)/4 = 1.675 m from the centre line of Flocculator.

Rpm of paddle (assumed- specification) =4 rpm

Ratio of paddles aera to area of flocculator (10 to 25% Recommended)= (8.47/38.465)x100 =22% Hence Ok.

Distance of paddle shaft from the centre line of vertical shaft is given by the equation

V= (2.π.r.n)/60

0.4= (2x3.14xr x4)/60

r= 0.9554m

Distance of paddle shaft from the centre line of vertical shaft= 1m

Opening in Partition Wall Between Clarifier & Flocculator

The velocity of water below the partition wall between the flocculator and clarifier be 0.3 m/minute. Therefore area of opening required for a velocity 0.3m/min below the partition wall will be

Area of opening below the partition wall = 218.75/(0.3x60)= 12.15 m^2

Depth below partition wall = 12.15/(πx7) = 0.55m =0.6m

Additional depth for storage of sludge in case the mechanical scraper is out of order =25% =0.25 x3.75= 0.9m

Total depth of tank at partition including freeboard 0.3m

=0.3 +3.75+0.9+0.7= 5.65m

Peripheral Launder and Weir

Provide outlet launder of width=0.6m

Provide outlet launder of depth =0.6m

Flow in Launder, for 50% flow length

= 50% of 228.26 cum/Hour = 114.13 Cum/Hour

Length of Weir, Perimeter of weir = πDcf = 3.14 x

15= 47.1 m
Weir Loading taken (As per Clause 7.5.8
(100 to 300m3 / m/ day)= (228.26 x24)/47.1
= 116.31m3/d/m
Free fall from top water level of Clariflocculator =0.10m
Depth of water in Launder =0.50m
Velocity of flow in Launder = [illegible] x [illegible] =0.088 m3/sec
Actual launder length provided= ð x (15+) = 48.042m
Surface Loading per Hour = [illegible]= = [illegible] =1.652 Cum/sqm/Hour
Surface Loading per Day = 1.652x24 =39.65 Cum/sqm/Day
As per manual 30 to 40 Cum/sqm/Day.Hence OK.
Bottom slopes / or scrapper bridge time for one revolution: Minimum 1:12 horizontal > 40 Minutes or more

Sludge Discharge Pipe

Daily sludge outflow (Sludge discharge 2500L/MLD flow) Consistency(98 %) water = 2.5x 5=12.5 m3
Sludge Discharge period = 15 min
Minimum size of sludge pipe =0.25m
Sludge discharge = sludge outflow/ sludge discharge period = 12.5/(15x60)= 0.014 m3/sec
Sludge velocity= Sludge Discharge/ (Area of Sludge Pipe)=0.014/(0.785x0.25x0.25) =0.283 m/sec
Peripheral Traction Drive Unit
Power requirement =0.75 w/m2 As per 7.5.9
Motor rating=(0.75wx0.7854x15x15)/0.8= 165.71watts
=0.00134102 x165.71= 0.222HP

Suggestion for Motor: 0.5HP,3 phase TEFC motor with necessary R.G.Box with pulley drive to give an ultimate RPH 1 to 1.5 to Bridge Unit Results and discussion

Figure 8,9,10 show the Clariflocculator components such as inlet pipe, flocculator, Clarifier, opening in flocculator wall, sludge collection, peripheral treated water collection channel and access bridge under Construction.

Discussion

The main objective of developing any Computerization system is to reduce the paperwork and save time. The developed spreadsheet in this work increases the efficiency and decreasing the workload [6]. It provides the flexibility of generating the required outputs. It has been realized that neither designer nor Institute/office has access to a licensed commercial software version, it may lead to software piracy. Secondly, Designers may end up with inaccurate or ambiguous designs without adequate knowledge of the software.

This spreadsheet is simple to use in comparison with any commercial software though it has few limitations, however, it is entirely adequate for the Hydraulic Design of Clariflocculator. It is easy to use by anyone who is familiar with spreadsheets and it is cost-effective than any commercial design software available in the market.

This developed Clariffloculator spreadsheet will display numerical and graphical outputs based on the given input data. It also shows component-wise intermediate calculations with dimensions and supporting formulas in a single sheet. Each detail in this sheet can be scrutinized and checked if necessary. This is in contrast to commercial software that typically does not produce all intermediate steps and underlying formulas.

The post-processing capability of the Clarifloculator spreadsheet is splendid. This MS Excel output sheet gives the final result and hence no further efforts are required to filter or format the output data unlike porting and subsequent operations are mandatorily required in any commercial software program (Van der, 2002). The designer can easily format output with colored cells, Font and he can modify if required.

Conclusion

The above work demonstrates a step-by-step hydraulic design procedure, detailed calculations and drawings of clariflocculator for the 5MLD water treatment plant

- A computer program using MS office Excel for the design of the same is developed along with the diagram
- This spreadsheet of hydraulic designs is a handy tool for design engineers for quick delivery and efficient designs by avoiding lengthy calculation
- This tool provides a feature that enables the user to change the input easily and get the output accordingly

- The Hydraulic design for the above unit has been used in the construction of WTP situated in Krishna Riverbank, Vijayawada, Andhra Pradesh, India
- The designer can validate this spreadsheet values with their manually calculated values and vice versa which enhances their confidence
- Hence, it is concluded that, this research work output can be used as a base reference for designing of Clariflocculator of any capacity WTP of present and future requirements

References

Burile, A.N. and Nagarnaik, P.B. 2010. Performance Evaluation Of A Water Treatment Plant, (Case Study) IEEE Computer Society. *Third International Conference on Emerging Trends in Engineering and Technology*. 57-60.

CPHEEO. *Manual On Water Supply And Treatment,* 3rd Edn., Standard book company, New Delhi.

Ferrer, J., Seco, A. and Serralta, J. 2008. DESASS: A software tool for designing, simulating and optimizing WWTPs, *Environmental Modelling & Software Journal*. 23 : 19-26.

María Bermúdez, Jerónimo Puertas and Luis Cea, 2020. Introducing Excel spreadsheet calculations and numerical simulations with professional software into an undergraduate hydraulic engineering course. *Comput Appl Eng Educ*. 28 : 193-206.

Mc.Cullough, B. D. and Heiser, A.A. 2008. On the accuracy of statistical procedures in Microsoft Excel 2007. *Computational Statistics & Data Analysis*. 10 : 4570-4578.

Niazkar, M. and Afzali, S.H. 2017. Analysis of water distributionnetworks using MATLAB and Excel spreadsheet: h based methods. *Comput. Appl. Eng. Educ.* 25 (1) : 129–141.

Van der Helm, 2002. Rietveld Modelling of drinking water treatment processes within the Stimela environment. *Water Supply*. 2 : 87-93.